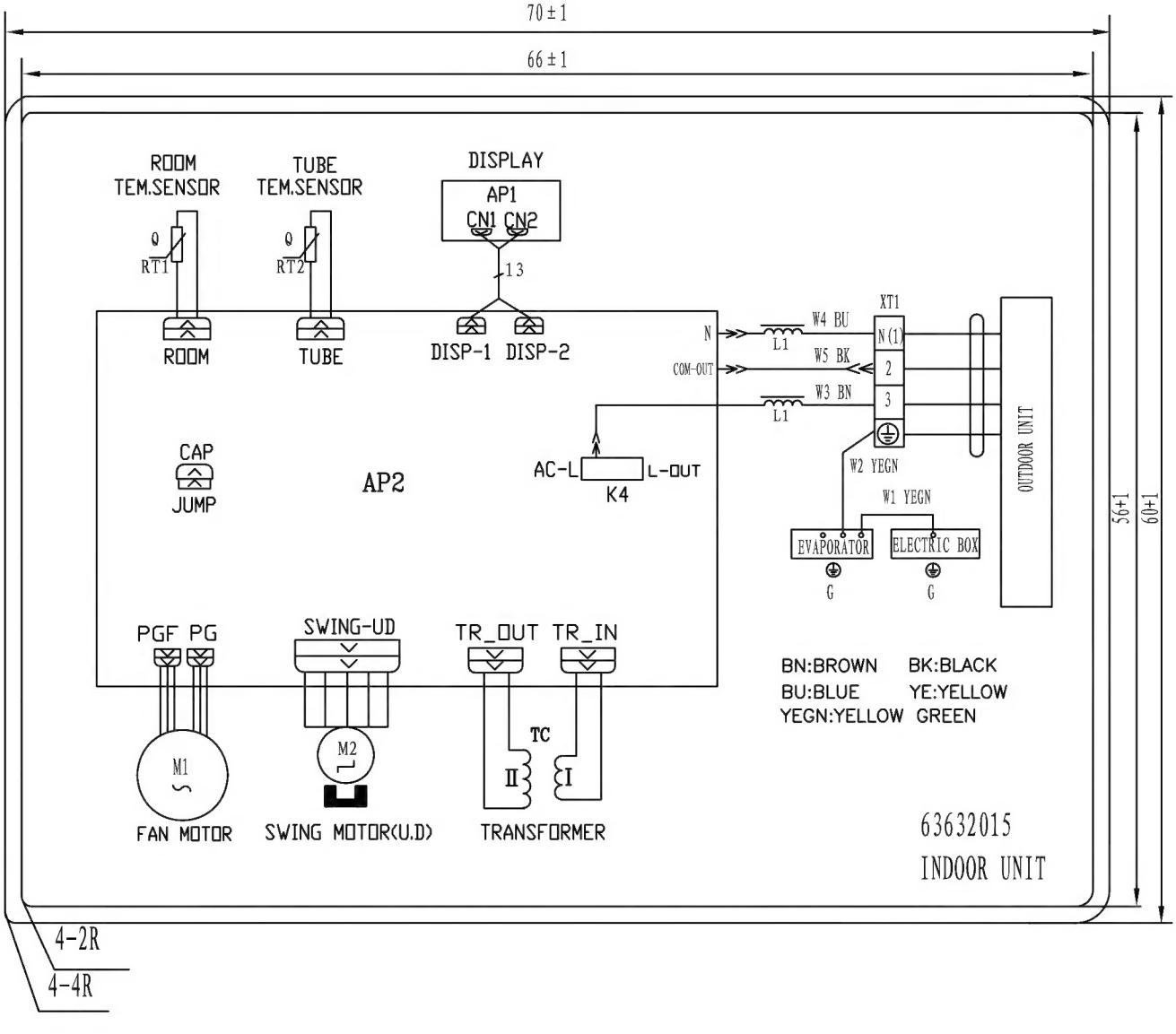
70±1
66±1
ROOM TEM.SENSOR
TUBE TEM.SENSOR
DISPLAY
AP1
CN1 CN2
RT1
RT2
13
ROOM
TUBE
DISP-1 DISP-2
N
COM-OUT
L1
W4 BU
W5 BK
W3 BN
XT1
N(1)
2
3
OUTDOOR UNIT
CAP
JUMP
AP2
AC-L
L-OUT
K4
W2 YEGN
W1 YEGN
EVAPORATOR
ELECTRIC BOX
G
PGF PG
SWING-UD
TR_OUT TR_IN
TC
II
I
M1
M2
FAN MOTOR
SWING MOTOR(U.D)
TRANSFORMER
BN:BROWN BK:BLACK
BU:BLUE YE:YELLOW
YEGN:YELLOW GREEN
63632015
INDOOR UNIT
56+1
60+1
4-2R
4-4R

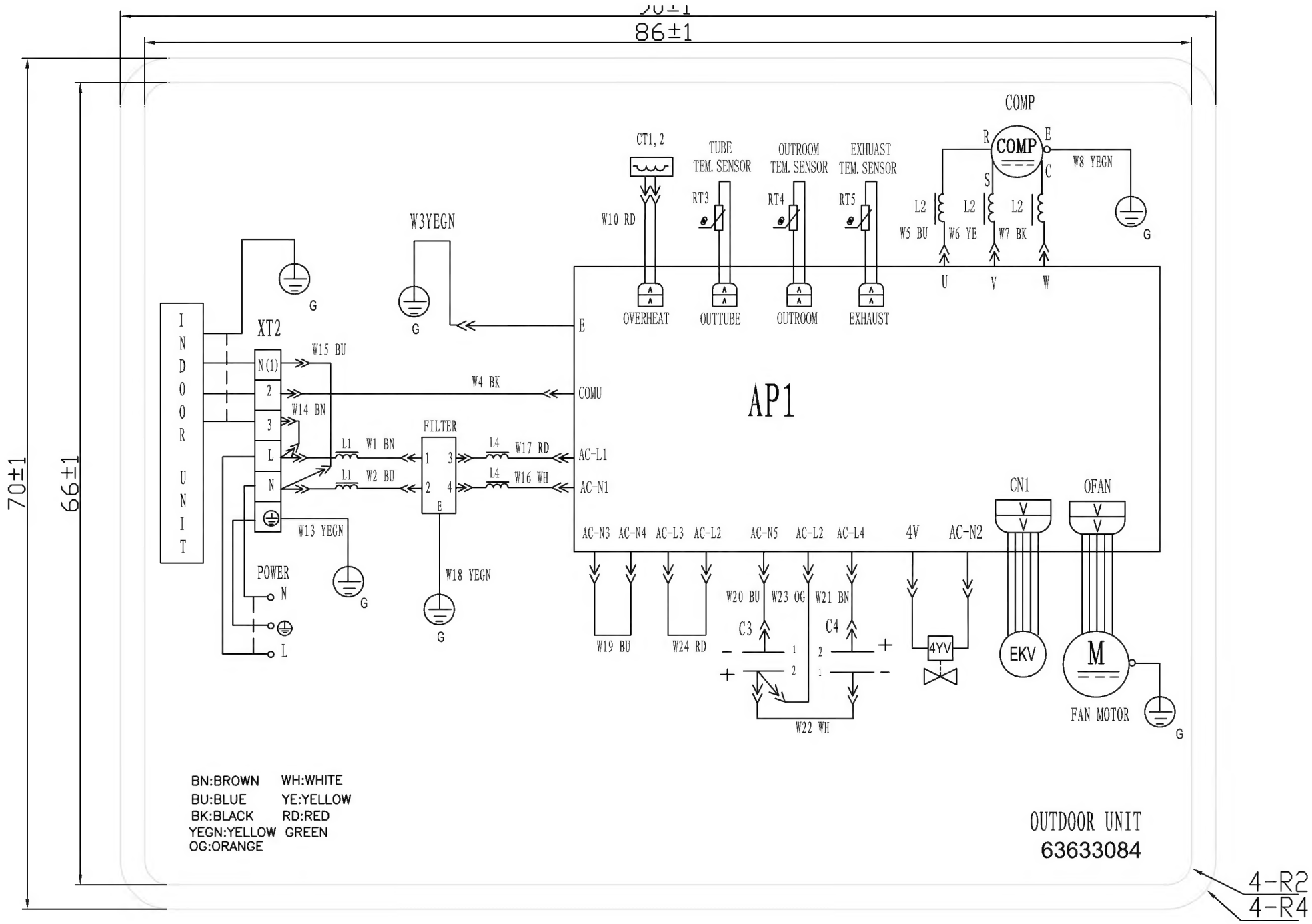
90±1
86±1
70±1
66±1
INDOOR UNIT
XT2
N (1)
2
3
L
N
W15 BU
W14 BN
W13 YEGN
POWER
N
L
G
W3YEGN
W4 BK
FILTER
L1
W1 BN
W2 BU
L4
W17 RD
W16 WH
W18 YEGN
CT1, 2
W10 RD
TUBE TEM. SENSOR
RT3
OUTROOM TEM. SENSOR
RT4
EXHUAST TEM. SENSOR
RT5
COMP
R
S
E
C
W8 YEGN
L2
W5 BU
W6 YE
W7 BK
U
V
W
AP1
E
COMU
AC-L1
AC-N1
OVERHEAT
OUTTUBE
OUTROOM
EXHAUST
AC-N3
AC-N4
AC-L3
AC-L2
AC-N5
AC-L2
AC-L4
4V
AC-N2
W19 BU
W24 RD
W20 BU
W23 OG
W21 BN
C3
C4
W22 WH
4YV
CN1
EKV
OFAN
M
FAN MOTOR
BN:BROWN
WH:WHITE
BU:BLUE
YE:YELLOW
BK:BLACK
RD:RED
YEGN:YELLOW GREEN
OG:ORANGE
OUTDOOR UNIT
63633084
4-R2
4-R4